Lux RDV-100 Modular LED Speed Hump

Code: RDV-100-X



We have taken road safety to the next level!

WHAT IS A SPEED HUMP?

This traffic control device is designed to slow down vehicles and improve road safety in areas requiring effective speed management.

The unit maintains lower vehicle speeds in locations with heavy pedestrian traffic or where traffic-calming measures are necessary.

Applications:

- School zones
- Pedestrian crossings
- Hospitals and clinics
- Residential communities and housing developments
- Parking lots
- Urban roads

Product Features

Manufactured from high-quality materials, the RDV-100 provides excellent resistance to impact, abrasion, and harsh weather conditions, ensuring long-term durability.

- The male-and-female interlocking system joins modules securely and precisely to achieve the required length, with end caps for a uniform finish
- The dynamic design and high-strength polymer construction make the Lux RDV-100 an excellent alternative to concrete speed humps. The polymer absorbs impacts more effectively and reduces the risk of vehicle damage
- Each module features solid yellow and black coloring to prevent surface wear and fading over time
- This traffic control device can be equipped with an LED lighting system featuring ultra-bright LED strips installed on the front and rear of each module. This configuration is suitable for two-way roadways and improves nighttime visibility in low-light areas

LED Lighting System Features

- High-efficiency electronic system
- Latest-generation ultra-bright LED strips
- Available with amber, white, or red LEDs
- Polycarbonate strip that amplifies and evenly distributes light
- Enhanced safety and visibility for drivers and pedestrians

Installation

- Secured to the pavement with steel anchors (not included)
- Firm, stable assembly through the male-and-female interlocking system

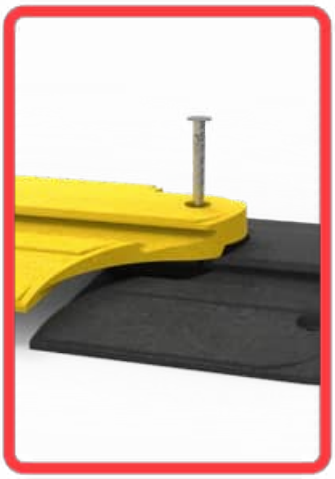



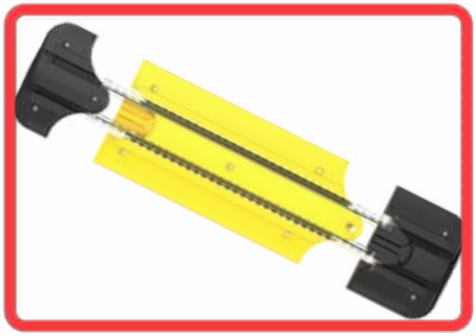

Lago Ayarza No. 88-A, Bodega N, Col. San Diego Ocoyoacac, Alcaldía Miguel Hidalgo, C.P. 11290, CDMX, México
Phones: +52 (55) 53.99.19.08 / 53.99.90.33 Email: info@multisenal.com.mx

Lux RDV-100 Modular LED Speed Hump

Code: RDV-100-X

Dimensions and other measurements are nominal and may vary by ± 2%

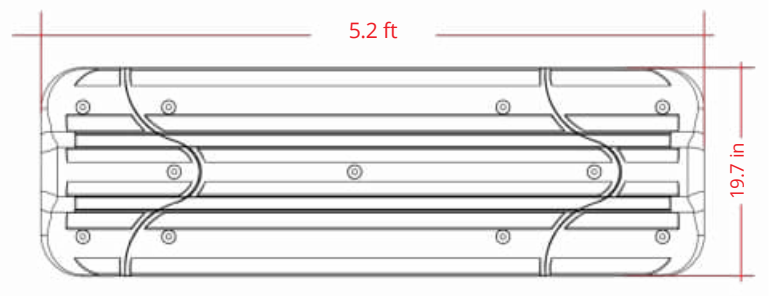

Dimensions

Material: High-strength polymer

Dimensions:

- **Female end:** 7.9 in
- **Center section:** 3.3 ft
- **Male end:** 15.7 in

Width: 19.7 in

Height: 2.4 in

Load resistance: 170,680 psi

Available colors: Yellow and black

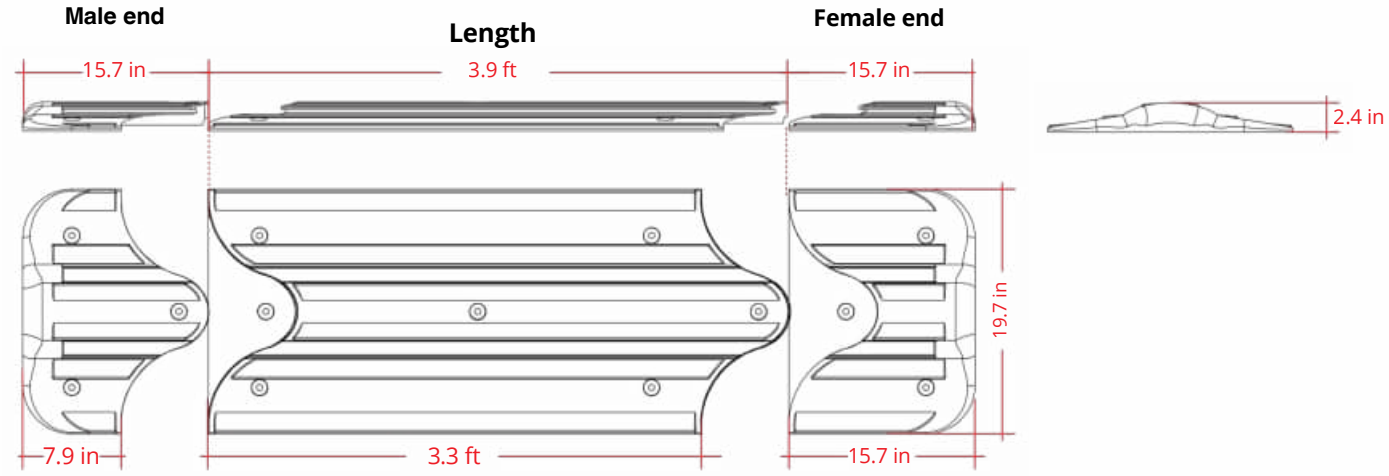



Anchoring Instructions

1. **Identify the anchor hole locations.** Place the speed hump at the installation site and use it as a template to indicate where the anchor holes need to be drilled.
2. **Drill the pavement.** Using a power drill fitted with a ½" concrete drill bit, drill the marked points to a depth of 10 inches.
3. **Assemble and install.** Assemble the speed hump modules, align the mounting holes, and insert the anchors into the drilled holes.

Note: For a more secure, longer-lasting hold, spread epoxy adhesive evenly inside each anchor hole before inserting the concrete anchor holes.

