RDV-100 Speed Hump

Code: RDV-100



We have taken road safety to the next level!

WHAT IS A SPEED HUMP?

This traffic control device is designed to slow down vehicles and improve road safety in areas requiring effective speed management.

The unit maintains lower vehicle speeds in locations with heavy pedestrian traffic or where traffic-calming measures are necessary.

Applications:

- School zones
- Pedestrian crossings
- Hospitals and clinics
- Residential communities and housing developments
- Parking lots
- Urban roads

Product Features

- This modular speed hump is designed to safely and effectively slow down vehicles, improving pedestrian safety and traffic control on streets, avenues, residential communities, parking lots, school zones, and areas with controlled traffic flow
- Manufactured from high-strength polymer in yellow and black, the modular system features male-and-female interlocking connections for a precise, secure fit between modules. This design allows custom length configurations, provides greater structural stability, and enables quick installation.
- Secured to the pavement with steel anchors (not included), providing reliable fastening for heavy-duty applications and high-traffic areas
- Resistant to impact, abrasion, moisture, and UV radiation for reliable outdoor performance
- Configurable length to meet project requirements
- Suitable for urban roads, schools, hospitals, parking lots, and areas with controlled traffic flow

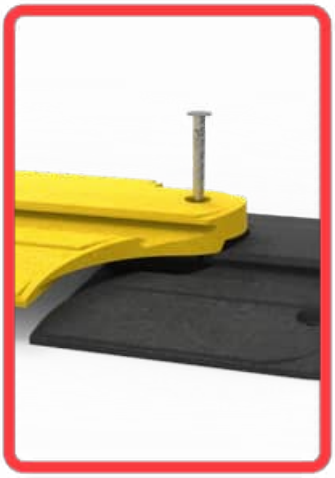





Lago Ayarza No. 88-A, Bodega N, Col. San Diego Ocoyoacac, Alcaldía Miguel Hidalgo, C.P. 11290, CDMX, México
Phones: +52 (55) 53.99.19.08 / 53.99.90.33 Email: info@multisenal.com.mx

RDV-100 Speed Hump

Code: RDV-100

Dimensions and other measurements are nominal and may vary by ± 2%

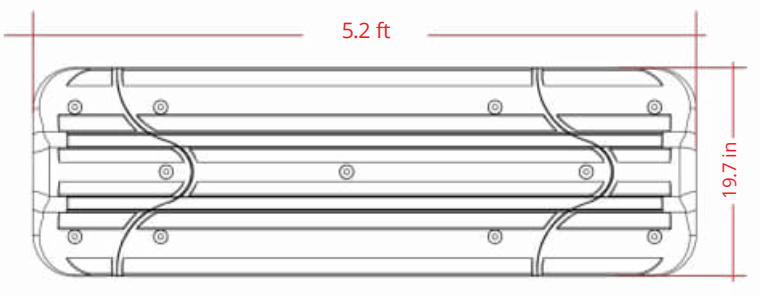

Dimensions

Material: High-strength polymer

Dimensions:

- **Female end:** 7.9 in
- **Center section:** 3.3 ft
- **Male end:** 15.7 in

Width: 19.7 in

Height: 2.4 in

Load resistance: 170,680 psi

Available colors: Yellow and black

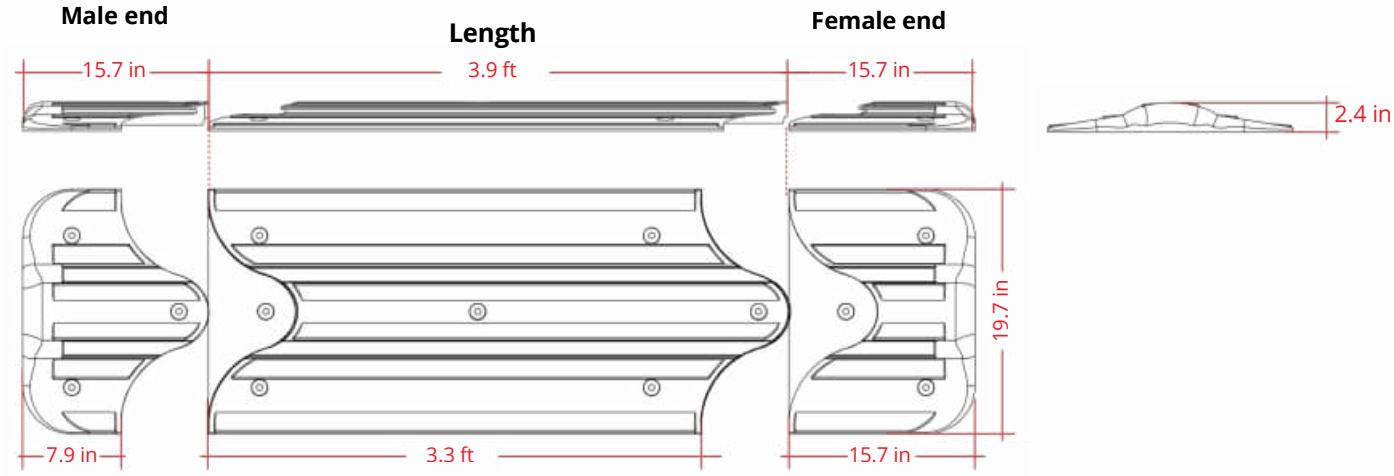



Anchoring Instructions

1. **Position the speed hump as a template** to mark the anchor hole locations. Using a power drill equipped with a ½" concrete bit, drill the designated areas to a depth of 10".
2. **Assemble and secure the speed reducer.** Assemble the modules and insert the anchors into the drilled holes. Using a 6 lb sledgehammer, carefully drive each anchor in until fully seated.

Note: For a more secure installation, spread epoxy adhesive evenly to the anchors before inserting them.

